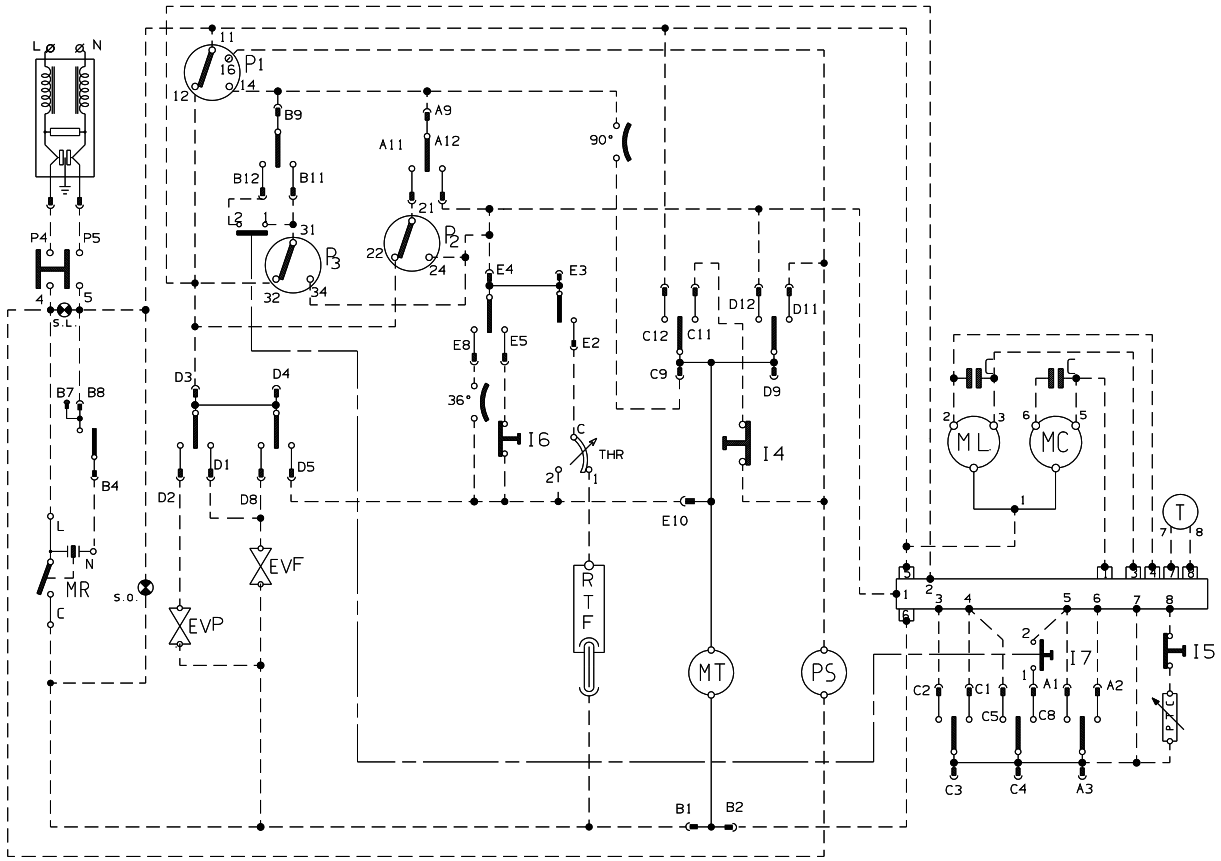

I7=TENDE I6=IDROSTOP I5=NO CENTRIF. I4=EXTRA ECONOMY