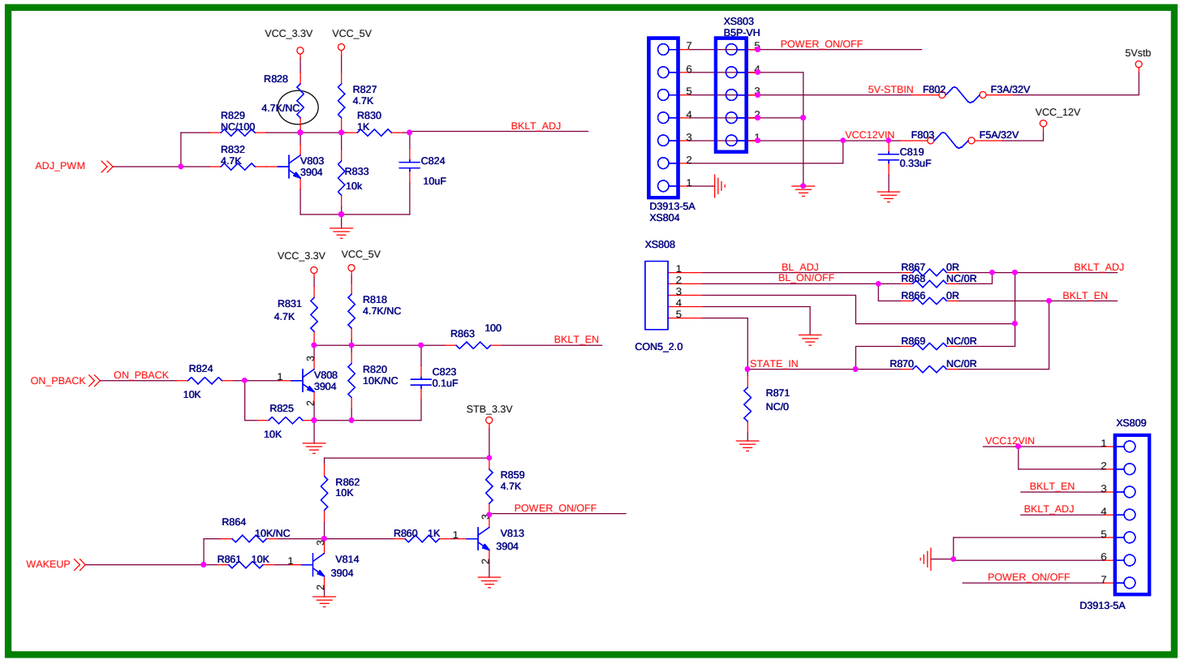
VCC_3.3V
VCC_5V
R828 4.7K/NC
R827 4.7K
R829 NC/100
R830 1K
BKLT_ADJ
ADJ_PWM
R832 4.7K
V803 3904
R833 10k
C824 10uF
XS803 B5P-VH
POWER_ON/OFF
5V-STBIN
F802 F3A/32V
5Vstb
VCC_12V
VCC12VIN
F803 F5A/32V
C819 0.33uF
D3913-5A XS804
XS808
BL_ADJ
BL_ON/OFF
R867 0R
R868 NC/0R
R866 0R
BKLT_EN
R869 NC/0R
R870 NC/0R
STATE_IN
CON5_2.0
R871 NC/0
R831 4.7K
R818 4.7K/NC
R863 100
ON_PBACK
R824 10K
V808 3904
R820 10K/NC
C823 0.1uF
R825 10K
STB_3.3V
R862 10K
R859 4.7K
R864 10K/NC
R860 1K
V813 3904
WAKEUP
R861 10K
V814 3904
XS809
D3913-5A

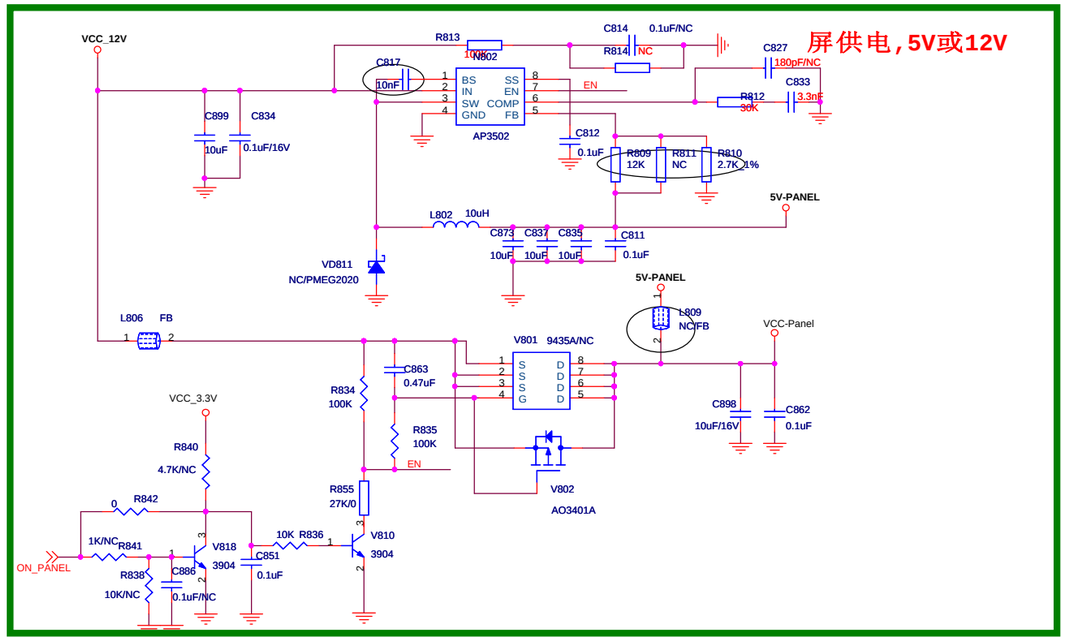
屏供电,5V或12V
VCC_12V
R813 10K
C814 0.1uF/NC
R814 NC
C827 180pF/NC
C817 10nF
N802 AP3502
BS SS IN EN SW COMP GND FB
EN
R812 30K
C833 3.3nF
C899 10uF
C834 0.1uF/16V
C812 0.1uF
R809 12K
R811 NC
R810 2.7K 1%
5V-PANEL
L802 10uH
C873 10uF
C837 10uF
C835 10uF
C811 0.1uF
VD811 NC/PMEG2020
L806 FB
L809 NC/FB
V801 9435A/NC
VCC-Panel
C863 0.47uF
R834 100K
R835 100K
C898 10uF/16V
C862 0.1uF
V802 AO3401A
VCC_3.3V
R840 4.7K/NC
R842 0
R855 27K/0
1K/NC R841
V818 3904
10K R836
V810 3904
ON_PANEL
R838 10K/NC
C886 0.1uF/NC
C851 0.1uF

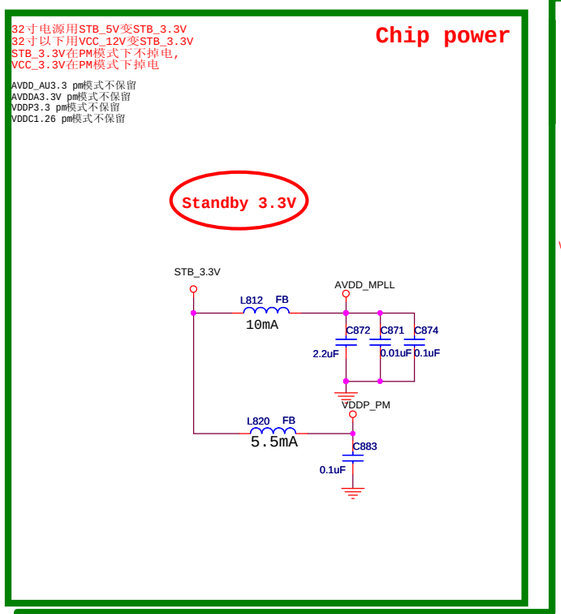
32寸电源用STB_5V变STB_3.3V
32寸以下用VCC_12V变STB_3.3V
STB_3.3V在PM模式下不掉电,
VCC_3.3V在PM模式下掉电
AVDD_AU3.3 pm模式不保留
AVDDA3.3V pm模式不保留
VDDP3.3 pm模式不保留
VDDC1.26 pm模式不保留
Chip power
Standby 3.3V
STB_3.3V
AVDD_MPLL
L812 FB
10mA
C872 2.2uF
C871 0.01uF
C874 0.1uF
VDDP_PM
L820 FB
5.5mA
C883 0.1uF

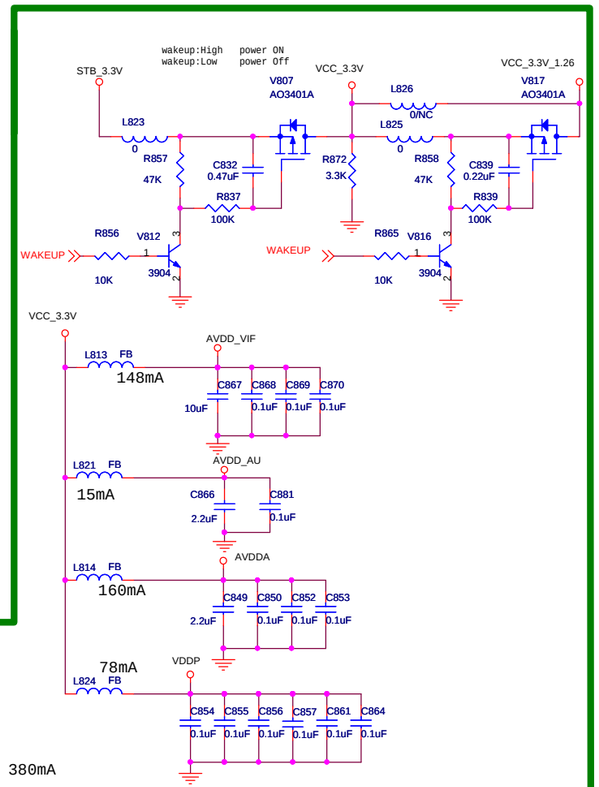
wakeup:High power ON
wakeup:Low power Off
STB_3.3V
V807 AO3401A
VCC_3.3V
L826 0/NC
VCC_3.3V_1.26
V817 AO3401A
L823 0
L825 0
R857 47K
C832 0.47uF
R837 100K
R872 3.3K
R858 47K
C839 0.22uF
R839 100K
WAKEUP
R856 10K
V812 3904
R865 10K
V816 3904
VCC_3.3V
AVDD_VIF
L813 FB
148mA
C867 10uF
C868 0.1uF
C869 0.1uF
C870 0.1uF
AVDD_AU
L821 FB
15mA
C866 2.2uF
C881 0.1uF
AVDDA
L814 FB
160mA
C849 2.2uF
C850 0.1uF
C852 0.1uF
C853 0.1uF
VDDP
78mA
L824 FB
C854 0.1uF
C855 0.1uF
C856 0.1uF
C857 0.1uF
C861 0.1uF
C864 0.1uF

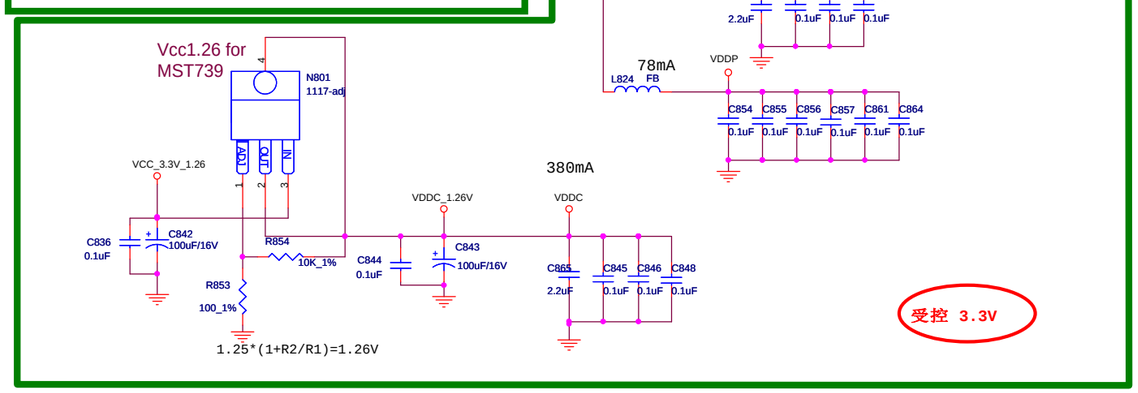
Vcc1.26 for MST739
N801 1117-adj
VCC_3.3V_1.26
C836 0.1uF
C842 100uF/16V
R854 10K_1%
R853 100_1%
1.25*(1+R2/R1)=1.26V
VDDC_1.26V
C844 0.1uF
C843 100uF/16V
VDDC
380mA
C865 2.2uF
C845 0.1uF
C846 0.1uF
C848 0.1uF
受控 3.3V

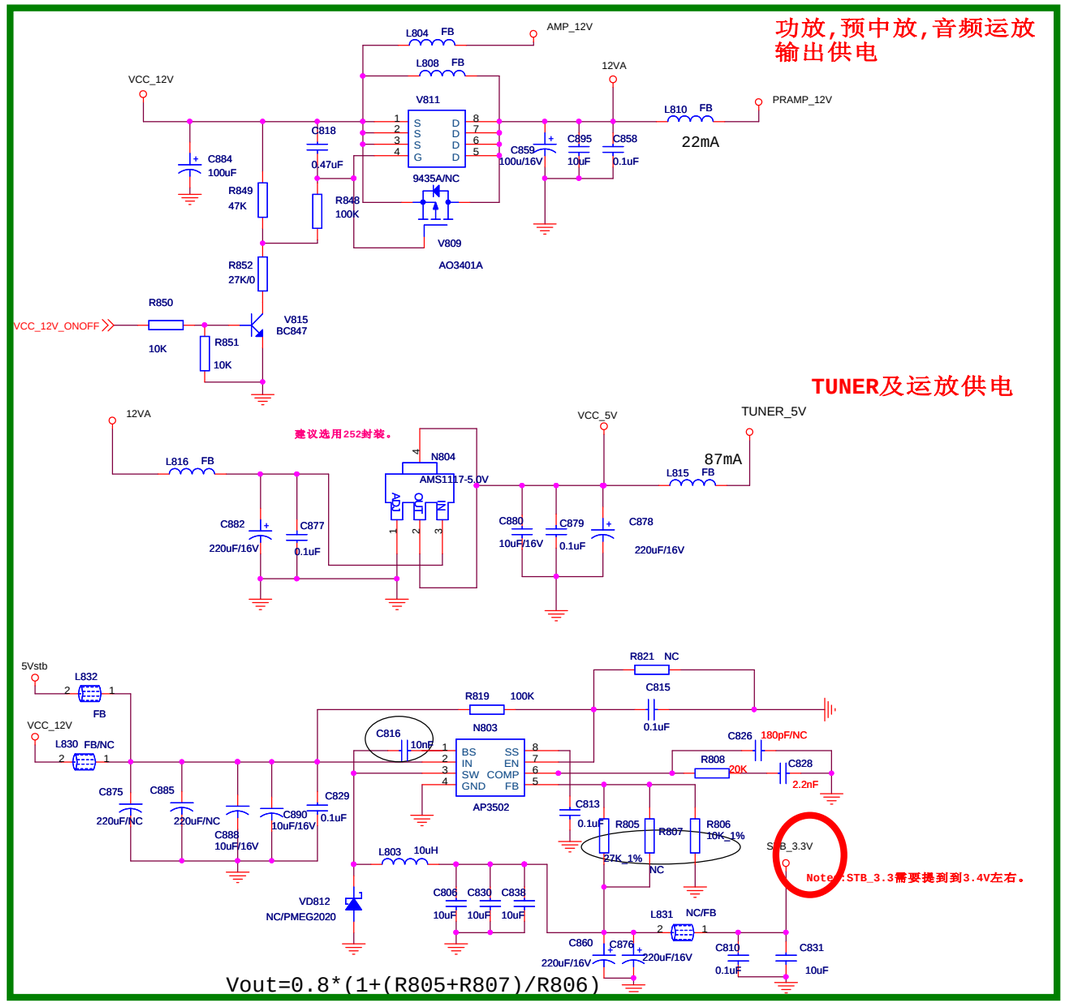
功放,预中放,音频运放
输出供电
L804 FB
AMP_12V
L808 FB
12VA
VCC_12V
V811 9435A/NC
L810 FB
PRAMP_12V
22mA
C818 0.47uF
C884 100uF
C859 100u/16V
C895 10uF
C858 0.1uF
R849 47K
R848 100K
V809 AO3401A
R852 27K/0
VCC_12V_ONOFF
R850 10K
V815 BC847
R851 10K
TUNER及运放供电
12VA
建议选用252封装。
N804 AMS1117-5.0V
VCC_5V
TUNER_5V
L816 FB
87mA
L815 FB
C882 220uF/16V
C877 0.1uF
C880 10uF/16V
C879 0.1uF
C878 220uF/16V
5Vstb
L832 FB
R821 NC
C815 0.1uF
R819 100K
VCC_12V
L830 FB/NC
C816 10nF
N803 AP3502
C826 180pF/NC
R808 20K
C828 2.2nF
C875 220uF/NC
C885 220uF/NC
C888 10uF/16V
C890 10uF/16V
C829 0.1uF
C813 0.1uF
R805 27K_1%
R807 NC
R806 10K_1%
STB_3.3V
Note:STB_3.3需要提到到3.4V左右。
L803 10uH
VD812 NC/PMEG2020
C806 10uF
C830 10uF
C838 10uF
L831 NC/FB
C860 220uF/16V
C876 220uF/16V
C810 0.1uF
C831 10uF
Vout=0.8*(1+(R805+R807)/R806)

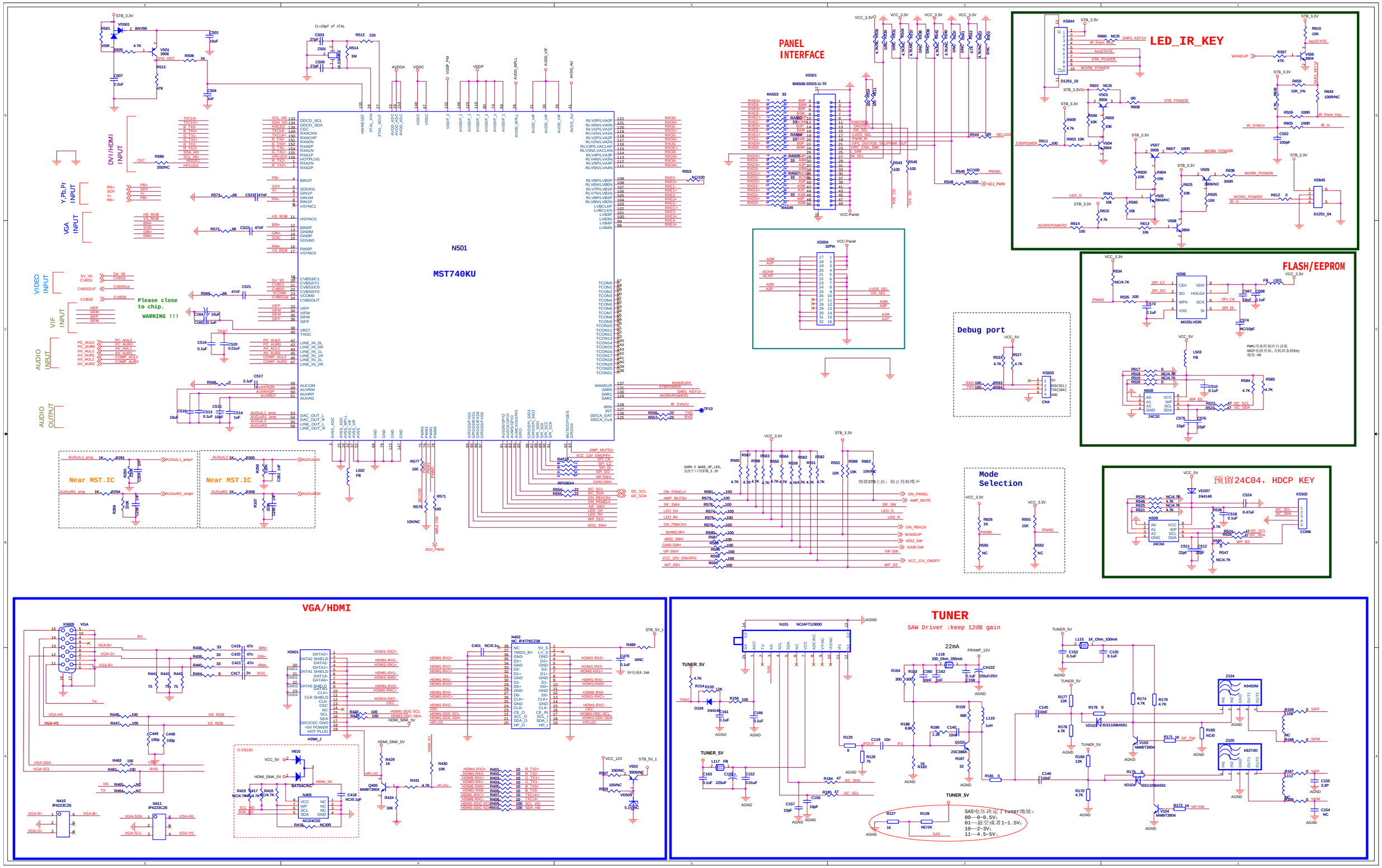

N501
MST740KU
PANEL INTERFACE
LED_IR_KEY
FLASH/EEPROM
Debug port
Mode Selection
预留24C04，HDCP KEY
Near MST.IC
Near MST.IC
Please close to chip.
WARNING !!!
DVI/HDMI INPUT
Y,Pb,Pr INPUT
VGA INPUT
VIDEO INPUT
VIF INPUT
AUDIO INPUT
AUDIO OUTPUT
VGA/HDMI
TUNER
SAW Driver :keep 12dB gain
22mA
SAS电压决定了tuner地址：
00—0-0.5V；
01—悬空或者1-1.5V；
10—2-3V；
11—4.5-5V。

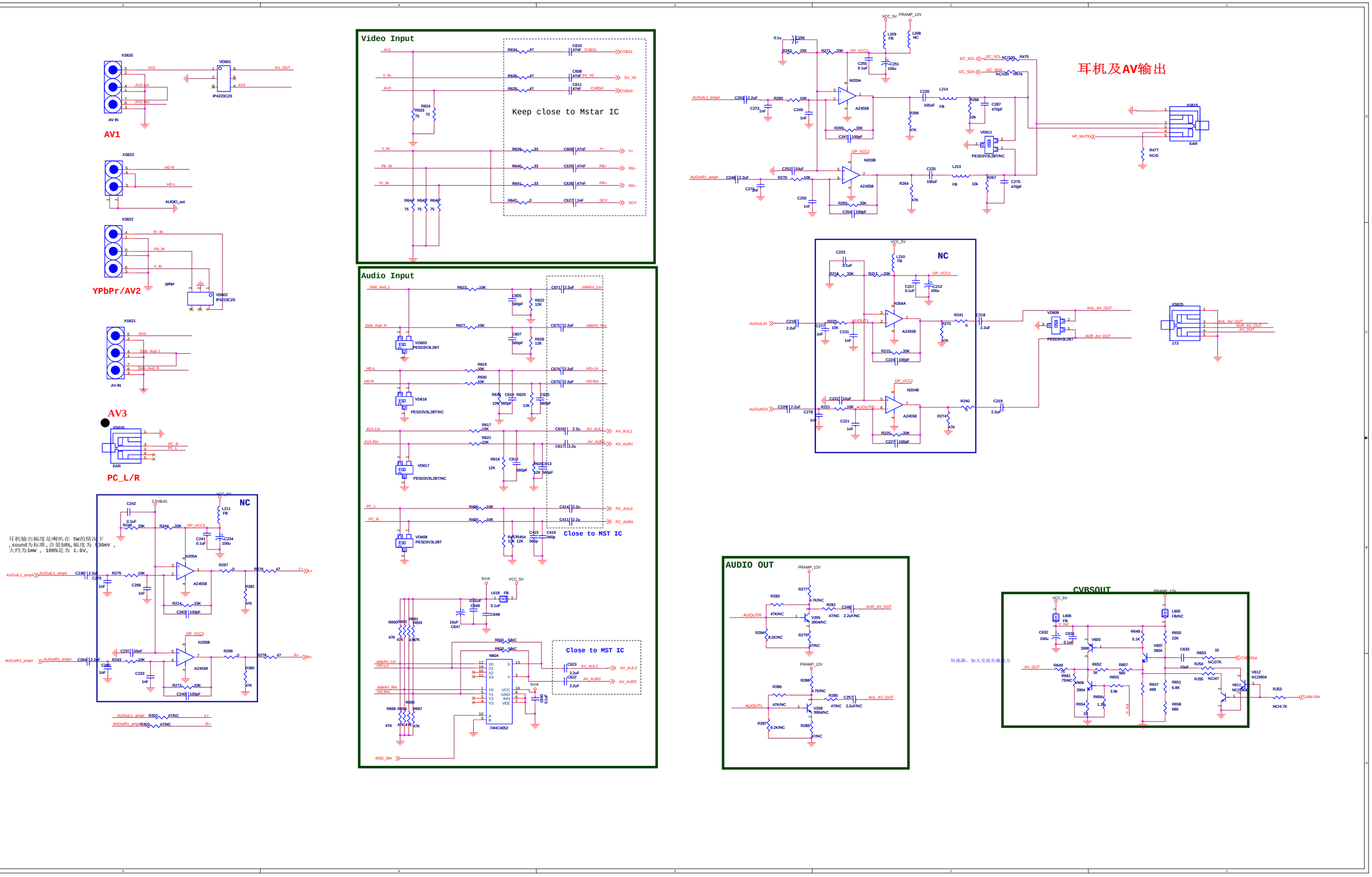
AV1
YPbPr/AV2
AV3
PC_L/R
Video Input
Keep close to Mstar IC
Audio Input
Close to MST IC
耳机及AV输出
NC
AUDIO OUT
CVBSOUT
恒流源，加大交流负载能力
耳机输出幅度是喇叭在 5W的情况下
,sound为标准,音量50%,幅度为 530mV ,
大约为1mW , 100%是为 1.6V,

STB CONTROL

amplifier ON H 3~5V

amplifier OFF L 0~0.3V

MUTE Control

Mute off H 3~5V

Mute on L 0~0.3V

STB,MUTE电压范围：0~AVCC(5V)

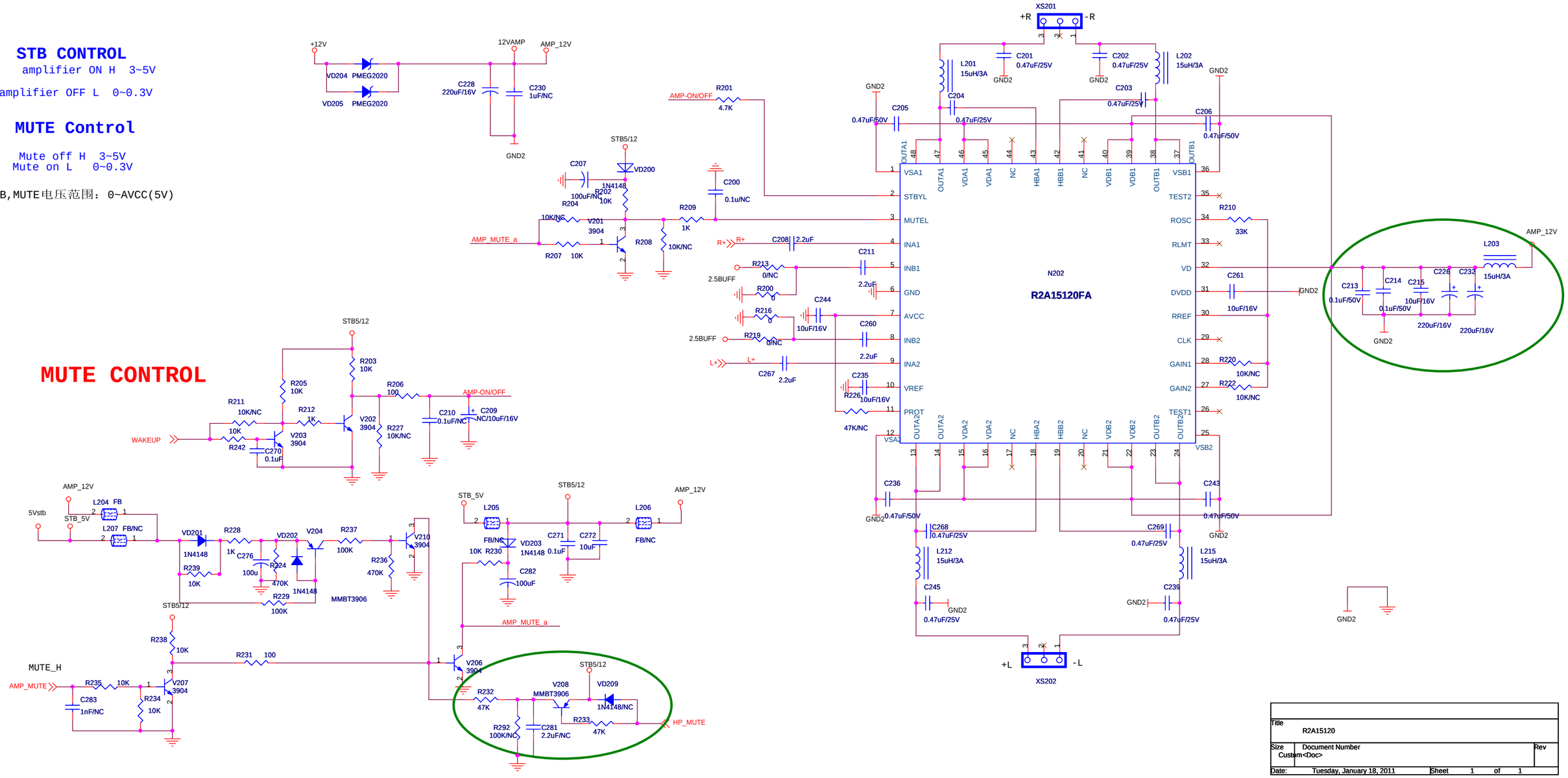

Title	R2A15120
Size	Custom<Doc>
Document Number	
Rev	
Date:	Tuesday, January 18, 2011
Sheet	1 of 1