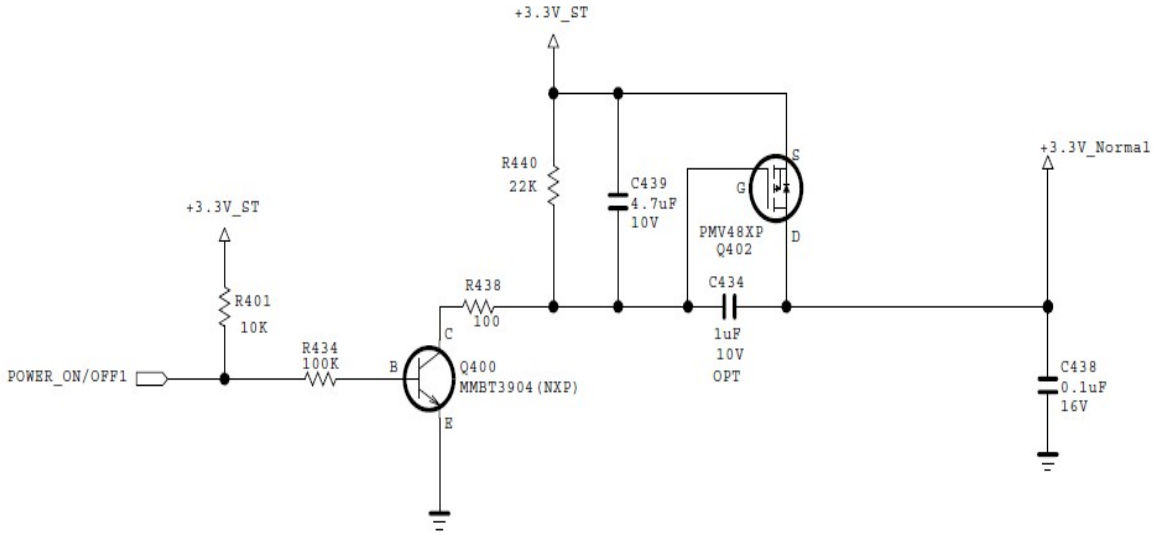
+3.3V_ST
R440
22K
C439
4.7uF
10V
S
G
D
PMV48XP
Q402
+3.3V_Normal
+3.3V_ST
R401
10K
R438
100
C434
1uF
10V
OPT
C
R434
100K
B
Q400
MMBT3904(NXP)
E
POWER_ON/OFF1
C438
0.1uF
16V